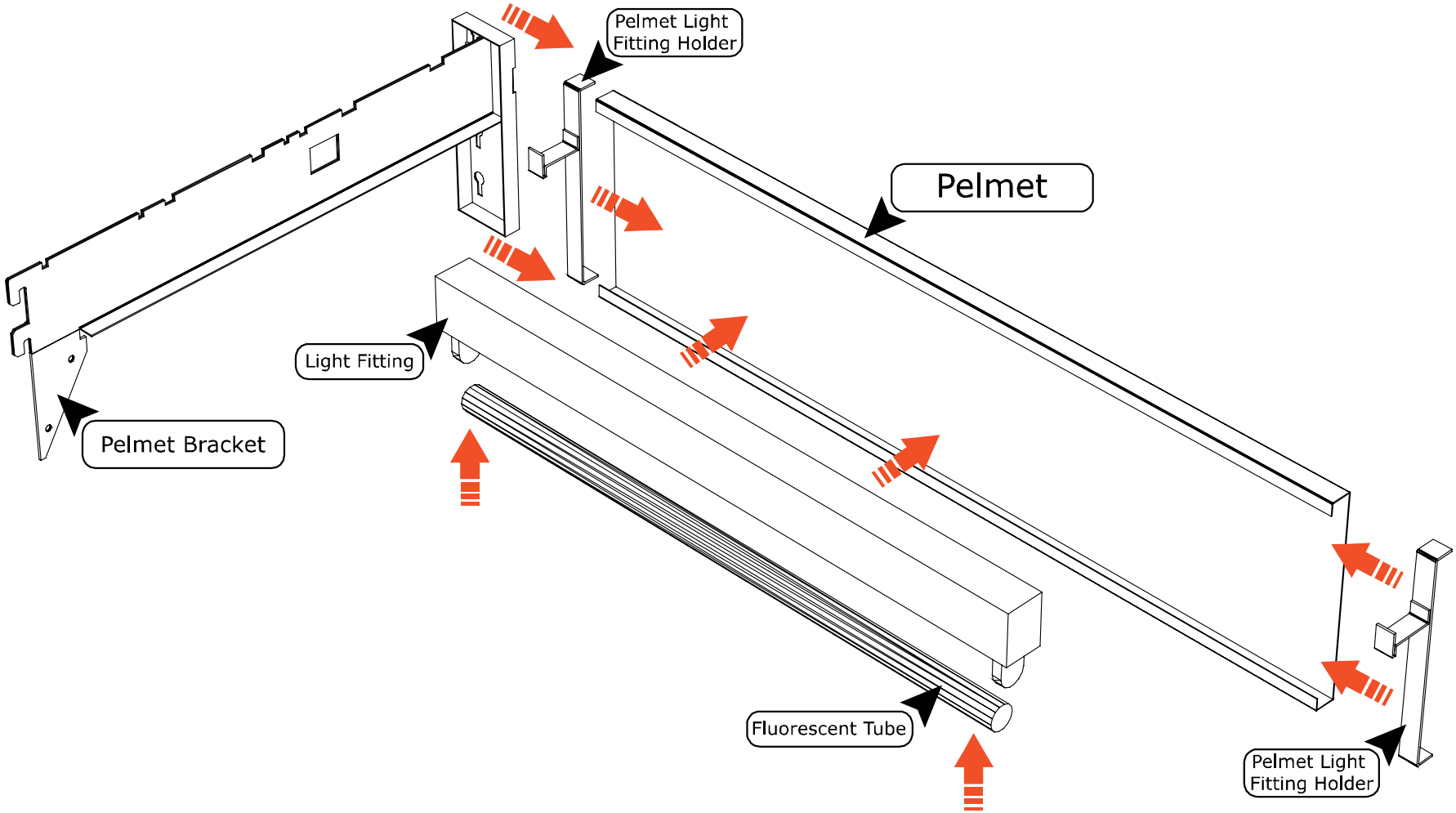
Pelmet Light Fitting Holder
Pelmet
Light Fitting
Pelmet Bracket
Fluorescent Tube
Pelmet Light Fitting Holder